sv Installations- och skötselanvisning
en Installation- and Maintenance Manual
de Installations-, Wartungs- und Bedienungsanleitung
fr Manuel d'installation et de maintenance
+
16314901 Matris

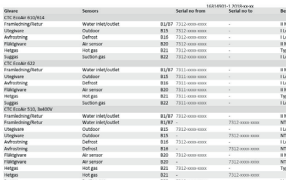

16314901-1 X110-xx-xx

Givare	Sensors		Serial no from	Serial no to	Be
CTC EcoAir 611/614					
Framledning/Retur	Water inlet/outlet	B1/B7	7312-xxxx-xxxx	-	B
Utegivare	Outdoor	B15	7312-xxxx-xxxx	-	Ut
Avfrostning	Defrost	B16	7312-xxxx-xxxx	-	Ut
Rörgivare	Air sensor	B20	7312-xxxx-xxxx	-	B
Hetgas	Hot gas	B21	7312-xxxx-xxxx	-	Tg
Suggas	Suction gas	B22	7312-xxxx-xxxx	-	Ts
CTC EcoAir 622					
Framledning/Retur	Water inlet/outlet	B1/B7	7311-xxxx-xxxx	-	B
Utegivare	Outdoor	B15	7311-xxxx-xxxx	-	Ut
Avfrostning	Defrost	B16	7311-xxxx-xxxx	-	Ut
Rörgivare	Air sensor	B20	7311-xxxx-xxxx	-	B
Hetgas	Hot gas	B21	7311-xxxx-xxxx	-	Tg
Suggas	Suction gas	B22	7311-xxxx-xxxx	-	Ts
CTC EcoAir 510, 8x810V					
Framledning/Retur	Water inlet/outlet	B1/B7	7312-xxxx-xxxx	-	B
Framledning/Retur	Water inlet/outlet	B1/B7	-	7313-xxxx-xxxx	NT
Utegivare	Outdoor	B15	7312-xxxx-xxxx	-	Ut
Utegivare	Outdoor	B15	-	7313-xxxx-xxxx	NT
Avfrostning	Defrost	B16	7312-xxxx-xxxx	-	Ut
Avfrostning	Defrost	B16	-	7313-xxxx-xxxx	NT
Rörgivare	Air sensor	B20	7312-xxxx-xxxx	-	B
Rörgivare	Air sensor	B20	-	7313-xxxx-xxxx	NT
Hetgas	Hot gas	B21	7312-xxxx-xxxx	-	Tg
Hetgas	Hot gas	B21	-	7313-xxxx-xxxx	-

CTC EcoHeat, CTC EcoPart

sv	en	de	fr
Givare hetgas	**Sensor, hot gas**	**Heissgas-fühler**	**Sonde de gaz chaud**

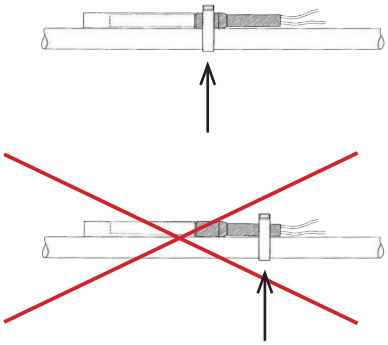

CTC EcoAir

sv	en	de	fr
Givare hetgas	**Sensor, hot gas**	**Heissgas-fühler**	**Sonde de gaz chaud**

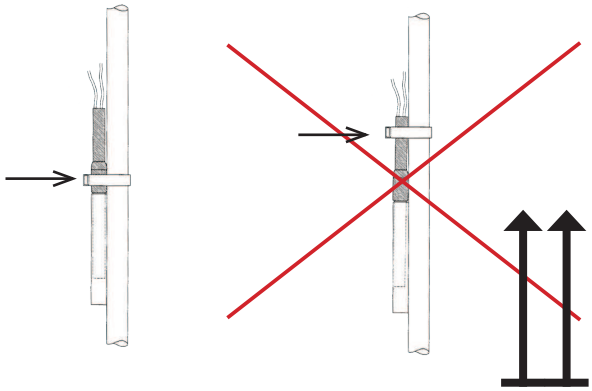

CTC EcoHeat, CTC EcoPart

sv	en	de	fr
Givare brine	**Sensor, brine**	**Fühler Sole**	**Sonde capteur**

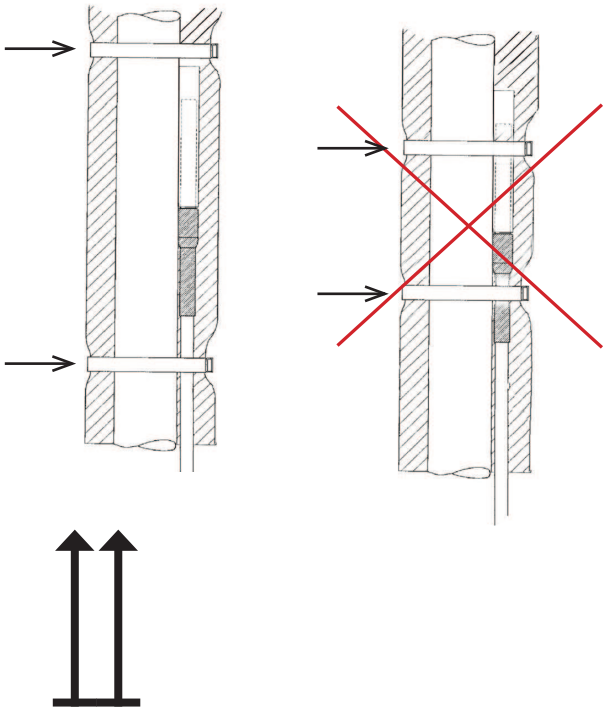

CTC EcoAir
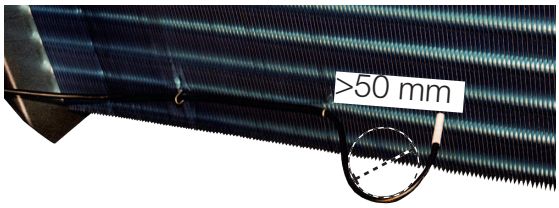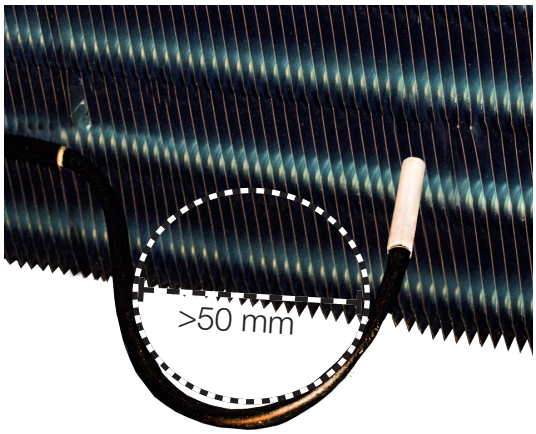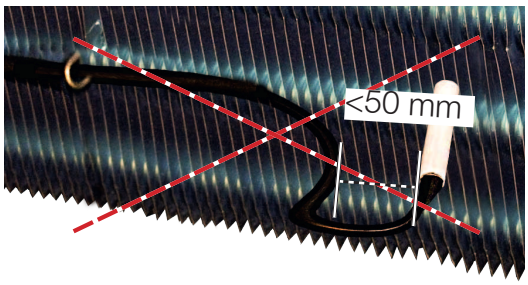
sv	en	de	fr
Givare avfrostning	**Defrost sensor**	**Abtau-fühler**	**Sonde dégivrage**